ultrasonic level indicator SonarFox® UST 20-31D01

Part no. 33558

ultrasonic level indicator

benefits

- non-contact level measurement
- easy adjustment even without medium
- robust housing for rough ambient conditions
- Suppression of interference signals
- Optional Ex version

Application

For continuous, non-contact level measurement in open or closed containers, tanks or silos. Suitable for liquid, mushy and pasty media. Ideal for sludge, adhesives, resins and waste water. The device can be easily adjusted even without a medium by means of the programming display with user-friendly menus. It also serves as a local display.

Description

The SonarFox® UST 20 level indicator uses the physical properties of ultrasonic waves to determine the level. An ultrasonic wave is emitted which is reflected by objects in the sound cone. The time up to the reception of the reflected echo is a measure of the distance. Since the mounting position is defined, it is possible to calculate the filling level of the medium. Type, density and temperature of the medium have no effect on the measurement – the only prerequisite is a reflecting surface. Acoustically diffuse surfaces such as foam or uneven surfaces of bulk solids are to be tested with regard to the application. An optional, additional alignment horn adapter can be used for such media. Installations or stirrers above the surface of the medium can be masked during empty setup.

Technical Specifications

Display
5-digit, 9 mm high, yellow Matrix OLED
Resolution 128 x 64 pixels

Measuring range
UST 20-31
0.5/20 m

Resolution
UST 20-31
< 2.5 mm

Measuring accuracy
± 0.15 % FS

Temperature error
max. 0.04 %/K

Measuring frequency
UST 20-31
30 kHz

Measuring interval
0–4 s

Operating temperature range
UST 20-31
-30/+60 °C
at process connection up to 90 °C (short-term up to 60 minutes)

Process pressure
max. 1 bar

Process connection
UST 20-31
aluminium alloy, flange EN 1092-1 DN100 PN16

Supply voltage
DC 18 – 36 V

Output signal
4–20 mA/HART, 2-wire

Load
R_{max} = 270 Ω at U = 24 V
R_{max} = 180 Ω at U = 22 V
R_{max} = 90 Ω at U = 20 V
R_{max} = 45 Ω at U = 19 V

Options

- Output RS-485 Modbus RTU
- Ex version

Current input
max. 22 mA

Signal damping
adjustable from 0 to 99 s

Housing
aluminium die cast

Ultrasonic transducer
PVDF

Degree of protection
IP 67 (EN 60529)

Electrical connection
Cable gland M16 x 1.5

Weight
UST 20-31
3.1 kg

Options
- Output RS-485 Modbus RTU
- Ex version

Technical Drawings

SonarFox® UST 20 31

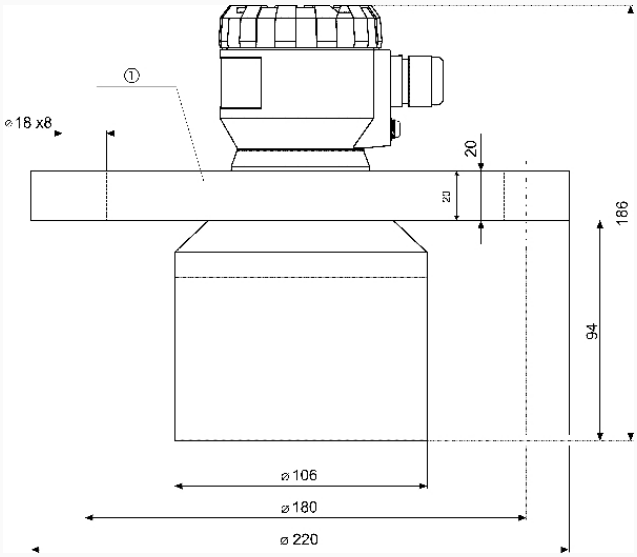

Dimensions (in mm)

Versions

			Part no.
ultrasonic level indicator SonarFox® UST 20-31D01	measuring range 0.5/20 m, flange DN 100, with display	●	33558

● in-stock items

● Non-stock items